# TRA/TRC

## Terminator Roof Extract Fans
## Installation and Maintenance Manual

## 1.0 IMPORTANT SAFETY INFORMATION

- The provision of the electrical supply and the connection of the unit to the electrical supply must be carried out by a qualified electrician.
- Isolate from power supply before removing any covers. During installation / maintenance ensure all covers are fitted before switching on the mains supply.
- All-pole disconnection from the mains as shown in the wiring diagram must be incorporated within the fixed wiring and shall have a minimum contact separation of 3mm in accordance with latest edition of the wiring regulations.
- This unit must be earthed (IEC 60364-4-41/BS 7671:411.6.2). Earth loop impedance (IEC 60364-6/BS 7671:643.7.3).
- This appliance should not be used by children or persons with reduced physical, sensory or mental capabilities or lack of experience and knowledge, unless they have been given supervision or instruction concerning the safe use of the appliance by a person responsible for their safety. Children shall not play with the appliance. Cleaning and user maintenance shall not be carried out by children.
- T1 & T2 on fans with TEC motors are fitted with a PTC thermistor for overheat protection and must be connected to a thermistor relay, operating voltage ≤ 2.5VDC, latching to prevent restart.
- RCD protection is recommended for all fans, suitable for use with inverters for Ecosmart versions.

### 1.1 HAZARD SYMBOLS

#### GENERAL WARNING

Signifies a general warning regarding hazard specified by supplementary information.

#### ELECTRIC SHOCK

This unit must be completely electrically isolated before any panels are removed. Check mains supply and control connections.

#### ROTATING PARTS

This unit contains fast moving rotational parts which may start automatically. It is the sole responsibility of the installer to adequately guard these components.

#### REFER TO INSTRUCTION MANUAL

Read and understand the installation and maintenance manual before installing, operating or maintaining this product.

### 1.2 IMPORTANT INFORMATION

This manual contains important information on the safe and appropriate assembly, transport, commissioning, operation, maintenance, disassembly and simple troubleshooting of the product.

While the product has been manufactured according to the accepted rules of current technology, there is still a danger of personal injury or damage to equipment if the following general safety instructions and the warnings contained in these instructions are not complied with.

- **Read these instructions completely and thoroughly before working with the product.**
- **Keep these instructions in a location where they are accessible to all users at all times.**
- **Always include the operating instructions when you pass the product on to third parties.**

### 1.3 PERSONAL PROTECTIVE EQUIPMENT

The following minimum Personal Protective Equipment (PPE) is recommended when interacting with Nuaire product:

- **Protective Steel Toe-Capped Footwear** - when handling heavy objects.
- **Full Finger Gloves (Marigold PU800 or equivalent)** - when handling sheet metal components.
- **Semi Fingerless Gloves (Marigold PU3000 3DO or equivalent)** - when conducting light work on the unit requiring tactile dexterity.
- **Safety Glasses** - when conducting any cleaning/cutting operation or exchanging filters.

Nuaire would always recommend a site specific risk assessment by a competent person to determine if any additional PPE is required.

## 2.0 INTRODUCTION

Terminator units are manufactured using a range of six basic cowl sizes A-F. Axial and centrifugal impellers are available.

A given cowl size may serve more than one size impeller e.g. TRA500 & TRA560 use a size C cowl (Section 2.1). Each unit consists of a base incorporating a spun venturi plate, a bridge from which the motor and impeller are suspended and a GRP cowl.

Motors are manufactured to BS5000, have sealed for life bearings and integrated thermal protection which must be incorporated into the control wiring. Failure to use this device will invalidate the equipment warranty.

### 2.1 CODE DESCRIPTION

| 1 | 2 | 3 | 4 | 5 | - | 6 | 7 | 8 |
|---|---|---|---|---|---|---|---|---|
| TR | A | S | 80 | L | - | 4 | 3 | ES |

| | |
|---|---|
| 1. Range: | TR = Terminator Extract Fan |
| 2. Impeller Type: | **A** = Axial<br>**C** = Centrifugal |
| 3. Backdraught Shutter: | **[none]** = No Shutter<br>**S** = Shutter |
| 4. Unit & Cowl Size: | **315** = Cowl A<br>**350** = Cowl A<br>**400** = Cowl B<br>**450** = Cowl B<br>**500** = Cowl C<br>**560** = Cowl C<br>**630** = Cowl D<br>**710** = Cowl D<br>**80** (represents 800) = Cowl E<br>**100** represents (1000) = Cowl F |
| 5. Blade Angle: | **H** = High degree blade angle<br>**L** = Low degree blade angle |
| 6. Motor Poles: | **4** = 4 Pole Motor<br>**6** = 6 Pole Motor |
| 7. Electrical Power: | **1** = Single Phase<br>**3** = 3 Phase |
| 8. Control Type: | **B** = BMS Interface only<br>**C** = Commissioning controls built-in<br>**ES** = Ecosmart Control |

### 2.2 PURLIN BOX / CURB

Purlin box / curbs are manufactured in galvanised mild steel. The upper face of the purlin box is fitted with a sealing strip. When installed, the curb must be securely attached to the trimmer angles.

### 2.3 SOAKER SHEET

Soaker sheets can be supplied by Nuaire. Manufactured in high quality GRP, each sheet is 19500 mm long and can be supplied to match most roof profiles. The soaker sheets are designed to be used over a prefabricated curb.

## 3.0 MECHANICAL INSTALLATION

Installation must be completed by competent persons, in accordance with good industry practice and should conform to all governing and statutory bodies i.e. IEE, CIBSE, etc.

**This equipment incorporates rotating and moving parts as well as electrical components and conductors. It is the responsibility of the installer to ensure that any such items remaining externally accessible once the equipment is installed are adequately guarded. This precaution is necessary to avoid the possibility of accidental injury or death. Particular attention must be paid to the outlet side of the rotating impellers if the cowl is removed.**

### 3.1 HANDLING

Units must at all times be handled carefully to avoid damage or distortion. The unit is delivered fully assembled and mounted on a pallet for ease of handling. When lifting or hoisting units, care must be taken to ensure that no pressure is applied to the cowl.

The unit is delivered completely assembled and a protective skin prevents damage to the unit. It is strongly recommended that this protective skin is allowed to remain in position for as long as possible. When necessary, the skin should be removed using a sharp knife, taking care not to score the unit surface.

The unit can now be inspected for damage. Any accumulation of dirt should be removed from the impeller (Section 5.3). The unit is designed for roof mounting but can be wall mounted using the optional wall kit available from Nuaire (Section 3.4.3).

### 3.2 ROOF INSTALLATION

**On inclined roofs, the longer dimension of the cowl must be running ACROSS roof slope. Unit can be installed at an angle of up to 80° from the horizontal with the cowl so aligned.**

Check that the curb mounting surface is flat and that the sealing strip is in position (suitable mastic may be used as an alternative).

If backdraught shutters or inlet side guards are to be fitted they should be installed centrally in the curb. Curbs other than Nuaire purlin box/curbs should be fitted with timber capping. On timber capped curbs the units may be attached using coach bolts or similar. When attaching to Nuaire purlin box/curbs the use of TEK self drilling screws (type SF 46516) or self tapping screws is recommended. Holes are provided in the skirt of the units base/venturi plate (Fig 5).

### 3.3 WALL INSTALLATION

**Unit MUST be installed using the appropriate wall mounting plate (Fig 4) and with the longer cowl dimension running horizontally.**

If still assembled, separate the unit and wall plate by removing the screws and washers from around the unit skirt. Retain the fixings. Depending on the type of wall, prepare a hole to the dimensions provided (Section 3.4.3). For a solid wall, fit the hole with a timber frame as shown. Drill and fit appropriate wall plugs and secure the timber frame. On completion, the frame must be flush with the outside surface of the wall.

For installation to a profile sheet wall, fit a suitable timber frame supported by means of angle-iron sections. The timber frame should, on completion, be flush with the outside sheet profile (Fig 3).

Apply a flexible silicone sealer (e.g. Flowseal 32) to the timber frame and secure the wall plate using suitable coach bolts, nuts and washers. On a solid wall installation, apply a fillet of sealant between the wall plate and wall.

On profile walls it will be necessary to 'flash' the wall plate. Flashing strips should extend sufficiently to allow fixing to a high portion of the profile section. Ensure that the flashing strips over lap at the four corners. Fill between the top and bottom flashing strips with Neoprene profile filler and seal all external joints and seams with a suitable flexible silicone sealer such as Flowsil 32 (Dimensions can be seen in Fig 4).

## 3.4 DIMENSIONS

### 3.4.1 EXTRACT FAN DIMENSIONS

**Fig 1:** Unit Dimensions (mm)

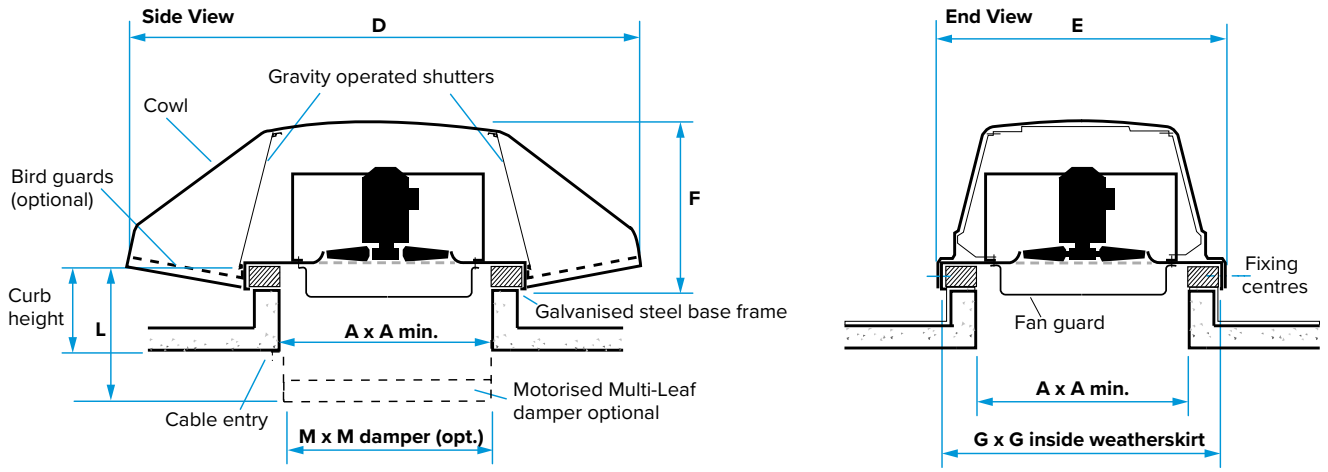


| Unit Size | Cowl Size | Dimensions (mm) | | | | | | | | | | | | Cowl Weight |
|---|---|---|---|---|---|---|---|---|---|---|---|---|---|---|
| | | A | B | C | D | E | F | G | H | J | K | L | M | |
| 315/350 | A | 460 | 45 | 475 | 900 | 620 | 340 | 600 | 550 | 560 | 150 | 450 | 390 | 16.3 kg |
| 400/450 | B | 560 | 45 | 575 | 1080 | 740 | 375 | 695 | 650 | 660 | 150 | 450 | 490 | 20.7 kg |
| 500/560 | C | 700 | 100 | 775 | 1320 | 964 | 475 | 945 | 900 | 910 | 150 | 450 | 690 | 34.4 kg |
| 630/710 | D | 800 | 100 | 900 | 1470 | 1076 | 490 | 1050 | 1000 | 1010 | 200 | 500 | 800 | 39.2 kg |
| 80 (800) | E | 900 | 100 | 1000 | 1780 | 1170 | 485 | 1150 | 1100 | 1110 | 250 | 650 | 900 | 66.8 kg |
| 100 (1000) | F | 1200 | 100 | 1300 | 2260 | 1476 | 600 | 1452 | 1400 | 1410 | 250 | 700 | 1200 | 114 kg |

### 3.4.2 FLAT ROOF CURB DIMENSIONS

**Fig 2:** Flat Roof Curb Dimensions (mm)

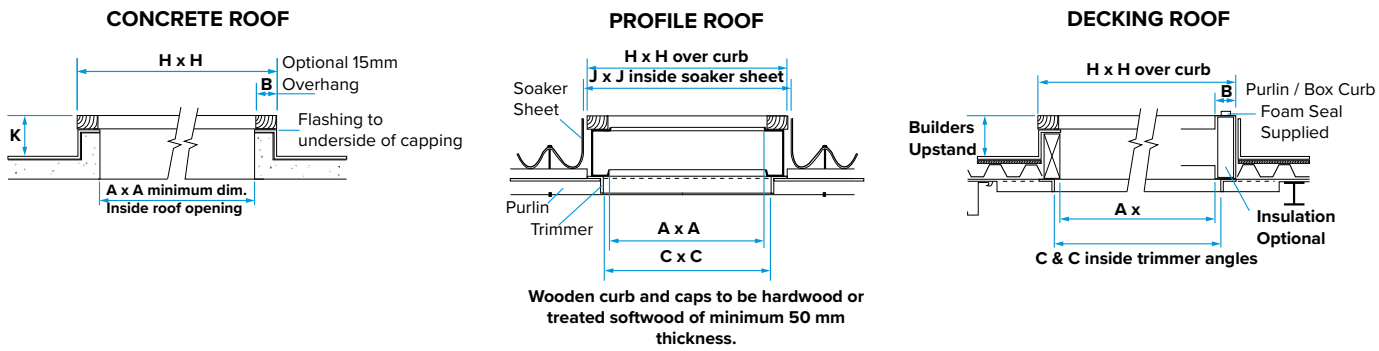


| Unit Size | Cowl Size | Dimensions (mm) | | | | | |
|---|---|---|---|---|---|---|---|
| | | A | B | C | H | J | K |
| 315/350 | A | 460 | 45 | 475 | 550 | 560 | 150 |
| 400/450 | B | 560 | 45 | 575 | 650 | 660 | 150 |
| 500/560 | C | 700 | 100 | 775 | 900 | 910 | 150 |
| 630/710 | D | 800 | 100 | 900 | 1000 | 1010 | 200 |
| 80 (800) | E | 900 | 100 | 1000 | 1100 | 1110 | 250 |
| 100 (1000) | F | 1200 | 100 | 1300 | 1400 | 1410 | 250 |

### 3.4.3 WALL PLATE/PITCHED ROOF PURLIN BOX CURB DIMENSIONS

**Fig 3:** Wall Plate/Pitched Roof Purlin Box Curb Dimensions

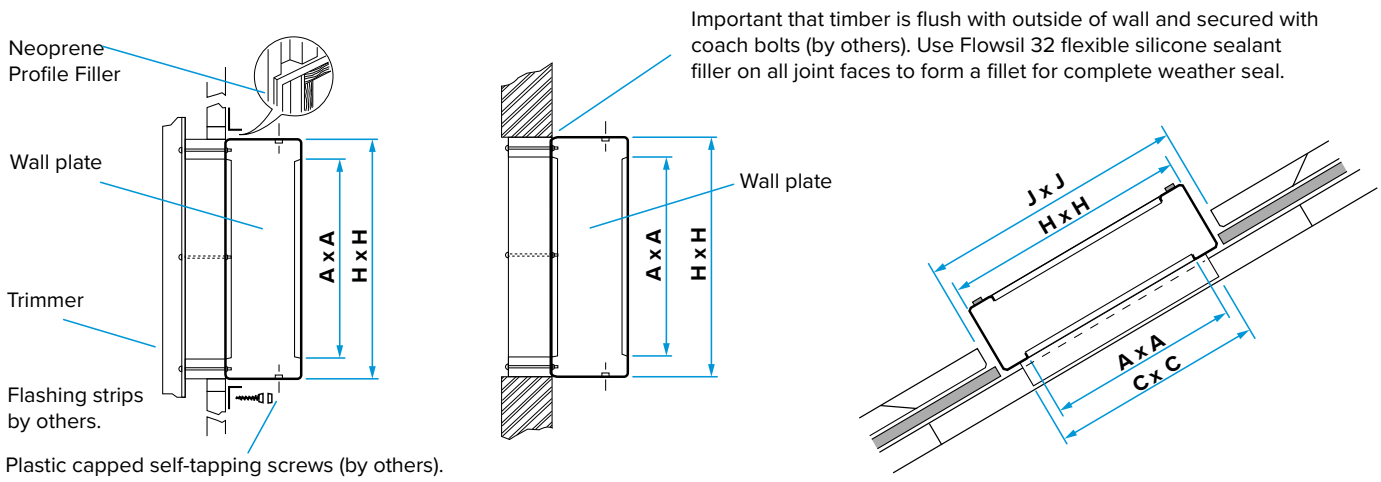


**Wall Plate secured to a profile sheet.** **Brick or similar wall prepared to accept Wall Plate.** **Roof profile prepared to accept Purlin Box Curb**

| Unit Size | Cowl Size | Dimensions (mm) | | | |
|---|---|---|---|---|---|
| | | A | C | H | J |
| 315/350 | A | 460 | 475 | 550 | 560 |
| 400/450 | B | 560 | 575 | 650 | 660 |
| 500/560 | C | 700 | 775 | 900 | 910 |
| 630/710 | D | 800 | 900 | 1000 | 1010 |
| 80 (800) | E | 900 | 1000 | 1100 | 1110 |
| 100 (1000) | F | 1200 | 1300 | 1400 | 1410 |

### 3.4.4 PURLIN BOX CURB & WALL PLATE DIMENSIONS

**Fig 4:** Wall Plate/Pitched Roof Purlin Box Curb Dimensions

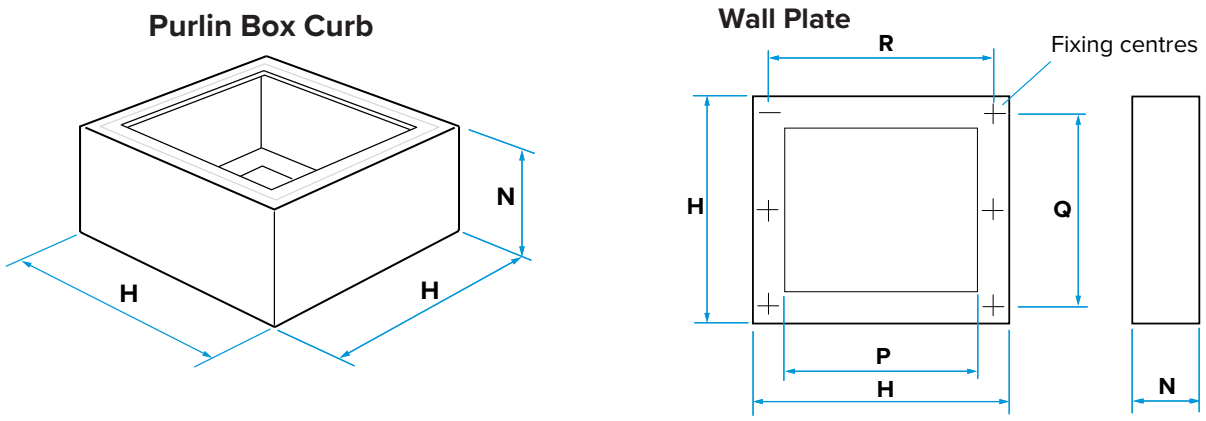


| Unit Size | Cowl Size | Purlin Box Curb Code* | Wall Plate Code | Dimensions (mm) | | | | |
|---|---|---|---|---|---|---|---|---|
| | | | | H | N | P | Q | R |
| 315 350 | A | PBC-A | TRWP-A† | 550 | 250 | 460 | 369 | 475 |
| 400 450 | B | PBC-B | TRWP-B† | 650 | 250 | 560 | 470 | 575 |
| 500 560 | C | PBC-C | TRWP-C† | 900 | 250 | 700 | 610 | 825 |
| 630 710 | D | PBC-D | TRWP-D‡ | 1000 | 250 | 800 | 690 | 900 |
| 80 (800) | E | PBC-E | TRWP-E‡ | 1100 | 350 | 900 | 780 | 1000 |
| 100 (1000) | F | PBC-F | TRWP-F‡ | 1400 | 325 | 1200 | 1080 | 1300 |

* For thermally insulated curb add T to the Purlin Box Curb code e.g. PBCT-A, PBCT-B etc.
† Three holes equally spaced.
‡ Four holes equally spaced.

### 3.5 UNIT EXPLODED VIEW

**Fig 5:** Exploded View of Unit Showing the Available Impeller Types

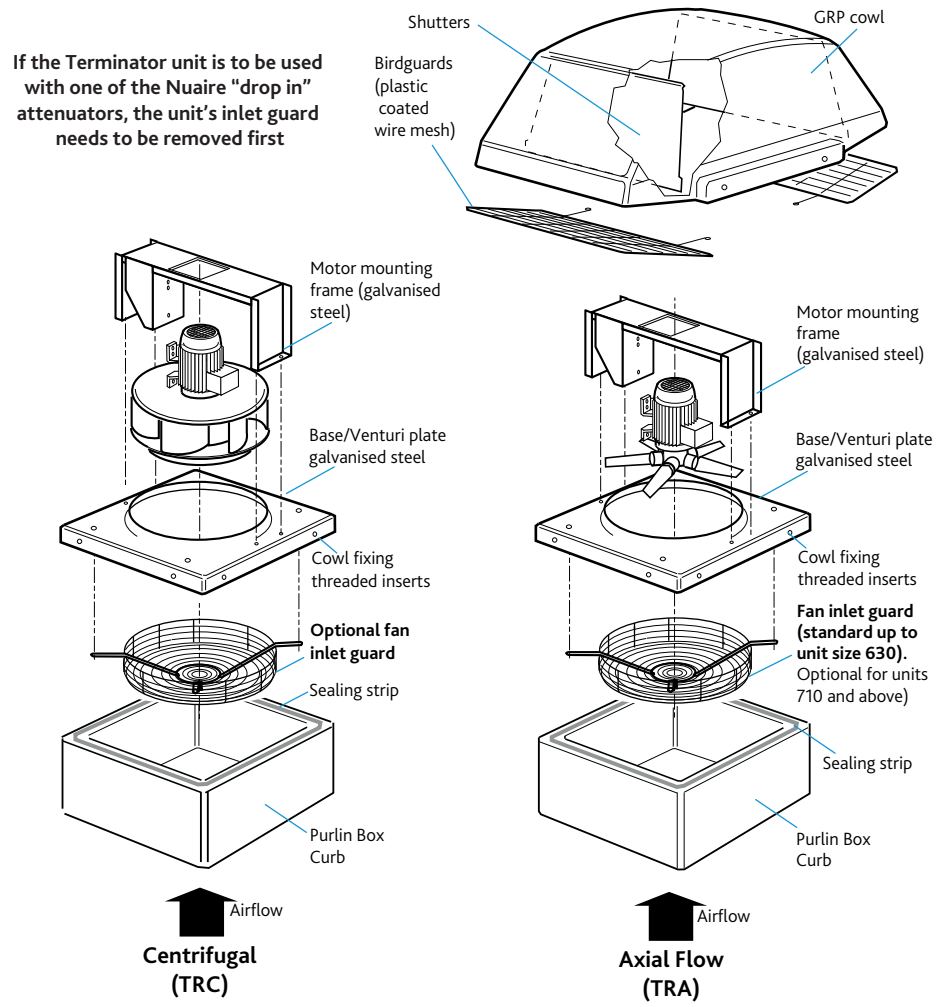


## 4.0 ELECTRICAL INSTALLATION

**Isolation - Before commencing work make sure the unit and control (if fitted) are electrically isolated from the mains supply.**

**Do not operate the unit with the cowl removed. The impeller will continue to rotate after the supply has been disconnected, allow sufficient time for the impeller to come to rest.**

**This equipment incorporates rotating and moving parts as well as electrical components and conductors. It is the responsibility of the installer to ensure that any such items remaining externally accessible once the equipment is installed are adequately guarded. This precaution is necessary to avoid the possibility of accidental injury or death. Particular attention must be paid to the outlet side of the rotating impellers if the cowl is removed.**

Refer to the unit rating label attached to the motor venture plate.

Check that the electrical voltage and frequencies correspond to those marked on the rating label.

Some units have a 600mm flexible conduit direct from the motor terminated in a connector box. This should be mounted in a convenient position next to the fan. Refer to the wiring diagrams and connect the supply to the terminal box. On other units the cowl must be removed to gain access to the connection box. Remove and retain the cowls M8 set screws with the aluminium and nylon washers. **When bird guards are fitted on larger units, remove the extra four M8 end bolt fixings before removing the cowl.**

Bring up the supply cables through the grommet provided in the baseplate. Refer to the wiring diagrams (page 5) and connect the supply to the unit terminal box which will be located on the baseplate or the motor bridge assembly.

When replacing the cowl ensure that the nylon washer is placed next to the cowl surface. If the four M8 end bolts are fitted, ensure the bird guard fixing hooks are located correctly. **The unit is not weather tight when cowl is removed.**

### 4.1 UNIT WIRING

The terminator range of units are pre-wired from the motor to an enclosed terminal box.

On TRA (axial) models this box is located at the end of a 600mm long flexible conduit which hangs underneath and is fixed to a convenient surface by the installer. These units will require bottom access to complete wiring.

On TRC (centrifugal) models the box is located on the fan plate or motor bridge inside the cowl. On these units it will be necessary to remove the cowl to gain access.

When wiring in the unit take care to avoid rotating components and also gravity shutters. 20mm holes are provided in the fan base plate to bring wiring out from inside the building.

## 4.2 CONNECTION DETAILS

Check that the electrical supply is compatible with the unit (see unit rating plate). Connection details are supplied with speed controls.

All wiring must be carried out in accordance with regulations for electrical installations and comply with the requirements of the local supply authority.

Ensure that the direction of rotation is correct. Single phase units are checked during manufacture for correct rotation. Three phase units must be tested on site and, if incorrect, interchange any two supply leads to reverse impeller direction.

## 4.3 WIRING DIAGRAMS

**Fig 6:** Single Phase, Single Speed Unit With Overheat Protection

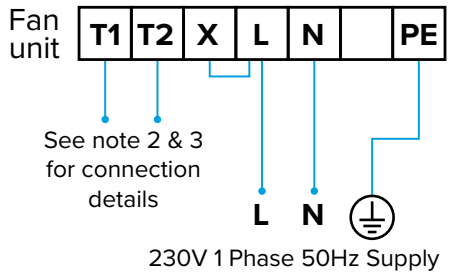


NOTE 1 : "X" needs an unregulated live feed when running. This is the feed to the capacitor.

NOTE 2: T1 & T2 on fans with Zeihl Abegg motors are fitted with thermal contacts. Max 250V AC, 60V DC. Min current 50mA. Max current 6A. This should be connected to a motor control relay, latching to prevent restart.

Note 3: T1 & T2 on fans with TEC motors are fitted with a PTC thermistor for overheat protection and must be connected to a thermistor relay, operating voltage ≤ 2.5VDC, latching to prevent restart.

**Fig 7:** Single Phase, Speed Controlled Unit With Overheat Protection

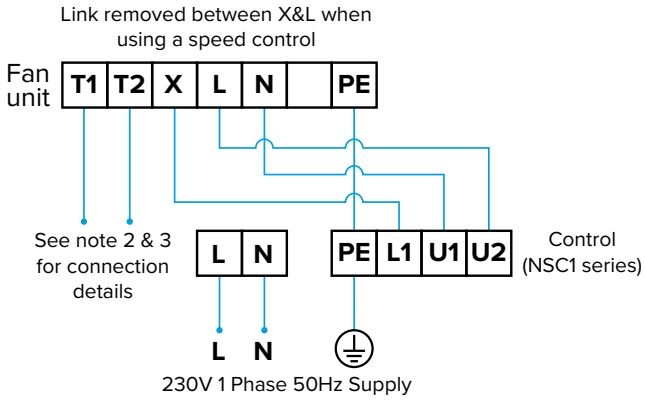


NOTE 1 : "X" needs an unregulated live feed when running. This is the feed to the capacitor.

NOTE 2: T1 & T2 on fans with Zeihl Abegg motors are fitted with thermal contacts. Max 250V AC, 60V DC. Min current 50mA. Max current 6A. This should be connected to a power relay for the speed control, latching to prevent restart.

NOTE 3: T1 & T2 on fans with TEC motors are fitted with a PTC thermistor for overheat protection and must be connected to a thermistor relay, operating voltage ≤ 2.5VDC, latching to prevent restart.

**Fig 8:** TRA Unit - Three Phase, Single Speed Unit

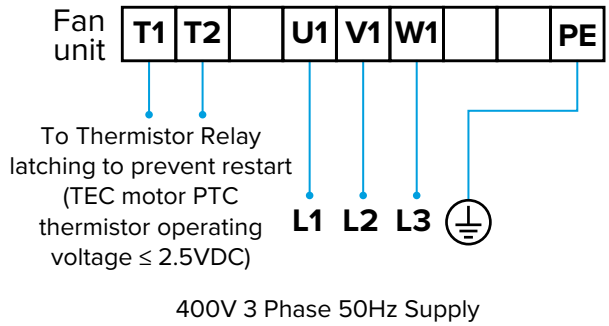


**Fig 9:** TRC Unit - Three Phase, Single Speed Unit

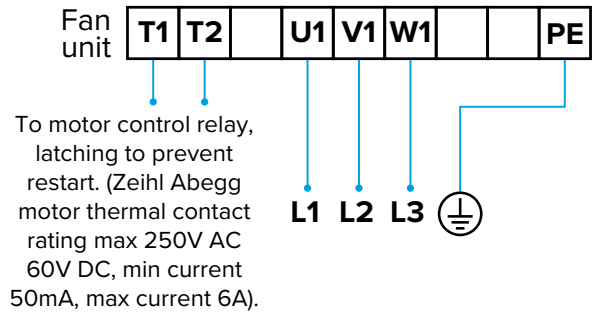


**Fig 10:** Three Phase, Single Speed Unit

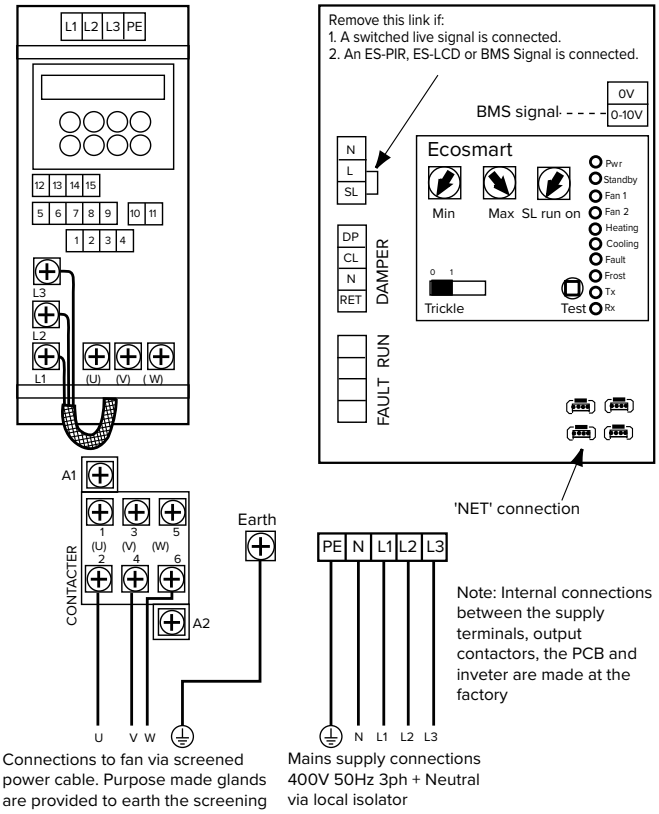


Note: The Ecosmart control box is a seperate item packed individually. See installation document 671193 for details of Ecosmart Control (ES-ISC).

# 5.0 MAINTENANCE

It is important that maintenance checks are recorded and that the schedule is always adhered to, in all cases, the previous report should be referred to.

**Before attempting to carry out any work; ensure the unit and speed control, if fitted, are electrically isolated.**

**Do not operate the unit with the cowl removed. The impeller will continue to rotate after the supply has been disconnected - allow sufficient time for the impeller to come to rest.**

Remove the cowl to gain access to the moving parts. **The unit is not weather tight when cowl is removed.**

**TRA (Axial)** The impeller is accessible immediately and can be removed if required.

**TRC (Centrifugal)** Motor/impeller bridge assembly can be removed after releasing the 4 or 6 screws holding the bridge support. On this unit the impeller cannot be removed from the motor.

**TRM (Mixed flow)** Motor/impeller bridge assembly can be removed after releasing the 4 or 6 screws holding the bridge support. Invert the bridge and remove impeller if required

## 5.1 ROUTINE MAINTENANCE

- Generally clean all areas of unit and treat any areas of corrosion.
- Check the impeller rotates freely and does not foul the fan plate.
- Remove all dust and dirt from impellers, be especially careful not to disturb balance weights.
- Check that bird guards (if fitted) / safety grilles are secure and free of obstruction.
- Check anti-backdraught shutters operate correctly.
- Inspect the condition and tightness of all fittings.

## 5.2 ANNUALLY

- Thoroughly inspect the unit and its components for corrosion, acting immediately to treat/restore any damaged areas.
- Check motor for undue wear, signs of overheating and apply winding insulation and continuity tests
- Inspect all bolts, fixings and electrical terminals for security.
- Check resilient mounts and replace any that show signs of wear or deterioration.

## 5.3 IMPELLER CLEANING

A build-up of dust/dirt may be removed by brushing carefully with a stiff brush. Take care not to damage or distort the impeller blades. If the impeller is too badly fouled to allow cleaning in situ, proceed as follows:

- Remove the impeller.
- Remove all loose dirt using a stiff brush.
- Sponge the impeller with warm soapy water. **Do not use solvents or caustic fluids.**
- Rinse thoroughly with clean water and wipe dry.

## 5.4 IMPELLER REMOVAL

### 5.4.1 TRA (AXIAL)

- Knock up the tab washer and remove the retaining screw.
- Remove the impeller from the motor shaft.
- Retain the motor shaft key.
- Replacement is the reversal of the above procedure.

### 5.4.2 TRC (CENTRIFUGAL)

On this type of unit the impeller cannot be removed from the motor. Cleaning of the impeller must be carried out in situ.

# 6.0 WARRANTY

Terminator units have a 3 year warranty, Ecosmart Terminator has a 5 year warranty. The warranty starts from the day of delivery and includes parts and labour for the first year. The remaining period covers replacement parts only.

This warranty is void if the equipment is modified without authorisation, is incorrectly applied, misused, disassembled, or not installed, commissioned and maintained in accordance with the details contained in this manual and general good practice.

The product warranty applies to the UK mainland and in accordance with Clause 14 of our Conditions of Sale. Customers purchasing from outside of the UK should contact Nuaire International Sales office for further details.

**Failure to maintain the unit as recommended will invalidate the warranty.**

# 7.0 END-OF-LIFE AND RECYCLING

Where possible Nuaire use components which can be largely recycled when the product reaches its end-of-life:

- Fans, motors, controls, actuators, cabling and other electrical components can be segregated into WEEE recycling streams.
- Sheet metal parts, aluminium extrusion, heating/cooling coils and other metallic items can be segregated and fully recycled.
- EPP, plastic ducting, nylon corner pieces, plastic heat exchangers, packaging material and other plastic components can be segregated into mixed plastic and widely recycled.
- Cardboard packaging, wood, used filters and other paper components can be largely recycled or fully processed in energy from waste centres.
- Remaining Items can be further segregated and processed in accordance with the zero waste hierarchy. Please call After Sales Support for further information on items not listed above.

**Ensure that Nuaire product is made safe from any electrical / water / refrigerant supplies before dismantling commences. This work should only be undertaken by a qualified person in accordance with local authority regulations and guidelines, taking into account all site based risks.**

## 8.0 AFTER SALES AND REPLACEMENT PARTS

For technical assistance or further product information, including spare parts and replacement components, please contact the After Sales Department.

If ordering spares please quote the serial number of the unit together with the part number, if the part number is not known please give a full description of the part required. The serial number will be found on the identification plate attached to the unit casing.

**Telephone 02920 858 400**
**aftersales@nuaire.co.uk**

Technical or commercial considerations may, from time to time, make it necessary to alter the design, performance and dimensions of equipment and the right is reserved to make such changes without prior notice.

## 9.0 NOTES