MEV-X

Continuous Extract Unit
Installation and Maintenance

The EMC Directive 2014/30/EU
The Low Voltage Directive 2014/35/EU

1.0 SAFETY INFORMATION

- The provision of the electrical supply and the connection of the unit to the mains must be carried out by a qualified electrician.
- Isolate from power supply before removing any covers. During installation / maintenance ensure all covers are fitted before switching on the mains supply.
- All-pole disconnection from the mains as shown in the wiring diagram must be incorporated within the fixed wiring and shall have a minimum contact separation of 3mm in accordance with latest edition of the wiring regulations.
- This unit must be earthed.
- Ducting must be securely fixed with screws to the spigot to prevent access to live parts. Duct runs terminating close to the fan must be adequately protected by suitable guards.
- If the supply cord is damaged, it must be replaced by the manufacturer, its service agent or similarly qualified persons in order to avoid a hazard.
- Precautions must be taken to avoid the back-flow of gases into the room from the open flue of gas or other fuel-burning appliances.
- This appliance should not be used by children or persons with reduced physical, sensory or mental capabilities or lack of experience and knowledge, unless they have been given supervision or instruction concerning the safe use of the appliance by a person responsible for their safety. Children shall not play with the appliance. Cleaning and user maintenance shall not be carried out by children.

2.0 INTRODUCTION

The MEV-X is designed to provide continuous mechanical extract ventilation to dwellings in accordance with Part F of the building regulations, the unit is listed on the Product Characteristics Database (PSDB).

The unit may be used for supply or extract, however, the different applications will require variations to the completed installation e.g. filtration, insulation. Contact Nuaire to discuss the full system design requirements.

IMPORTANT

This appliance should not be used by children or persons with reduced physical, sensory or mental capabilities or lack of experience and knowledge, unless they have been given supervision or instruction concerning the safe use of the appliance by a person responsible for their safety. Children shall not play with the appliance. Cleaning and user maintenance shall not be carried out by children.

3.0 INSTALLATION

The provision of the electrical supply and the connection of the unit to the mains must be carried out by a qualified electrician. All-pole disconnection from the mains as shown in the wiring diagram must be incorporated within the fixed wiring and shall have a minimum contact separation of 3mm in accordance with latest edition of the wiring regulations. Ensure that the mains supply (Voltage, Frequency and Phase) complies with the rating label.

Please note sufficient access and a clear working space around the unit is required to allow access for commissioning and also for maintenance of key components, please allow a minimum of 110mm from the access panels (Figure 1). An additional 20mm will be required at the mains entry point to allow cable routing, this distance will be greater if using an additional cable gland.

The unit is designed to be installed predominantly on a ceiling/ slab, the unit must not be floor mounted. If wall mounting to prevent potential water ingress the cable entry should be on the underside of the unit or replaced with a sealed cable gland, the unit must also be mounted square to prevent ingress around the PCB cover.

The unit must be installed indoors, on a suitable wall away from direct sources of frost, heat and water spray or moisture generation. For a vibration-free result the unit must be mounted to a solid structure.

The unit can be secured in place using the four mounting holes (fixings supplied by others) provided (Figure 2).

To ensure vibration is not transferred into the structure, it is advised to fit a small spacer (supplied) between the unit and the mounting surface at each fixing point.

3.1 Ducting

Ducting must be securely fixed with screws to the spigot to prevent access to live parts. Duct runs terminating close to the fan must be adequately protected by suitable guards.

Precautions must be taken to avoid the back-flow of gases into the room from the open flue of gas or other fuel-burning appliances.

The unit is not fitted with a back-draught shutter or filter as standard. These should be integrated into the system design where appropriate and can be purchased from Nuaire if required. If extracting from a dwelling it is advised the incoming air to the unit is filtered to minimum grade of G2.

It is recommended that rigid ducting be used it all times. Flexible ducting has a very high resistance and it is impossible to calculate how much resistance will be on a system if used.

If used, the flexible ducting must be kept to a minimum and should always be pulled taut. A maximum of 300mm should be used on each leg.

If used to supply fresh air from outside the heated envelope of the dwelling, the duct should be insulated with material having a thermal resistance of >0.625m2 K/w, in order to prevent condensation on the exterior of the duct to the unit.

Ducting must be installed in such a way that resistance to airflow is minimised. Bends should be kept to a minimum.

A minimum distance of 200mm between the appliance and any bends in ductwork is recommended. Ideally 200mm diameter or 220 x 90mm rectangular ducting should be used.

Ducting joints must be sealed with silicone type sealant and shall be adequately and reliably fixed to the appliance.

3.2 Pre-Commissioning

The unit must not be used during site construction or the clean-up period as cement and plaster dust can be abrasive which may affect fan performance and reliability.

While the property is drying out, very high moisture levels are likely to occur. Therefore it is advisable that if the installation and building works are complete the unit is left running. If the building works are not complete, please close or cover the air valves to prevent condensation forming in the ductwork and unit due to natural migration of warm air.

4.0 DIMENSIONS

1 Unit Dimensions (mm)

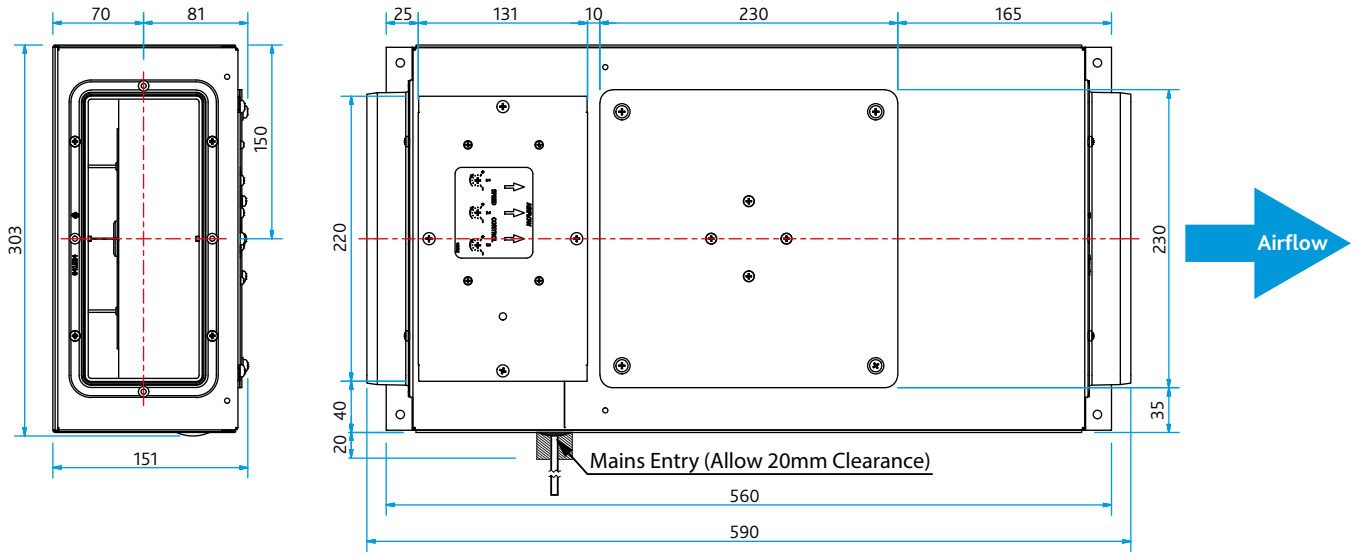

2 Mounting Hole Dimensions

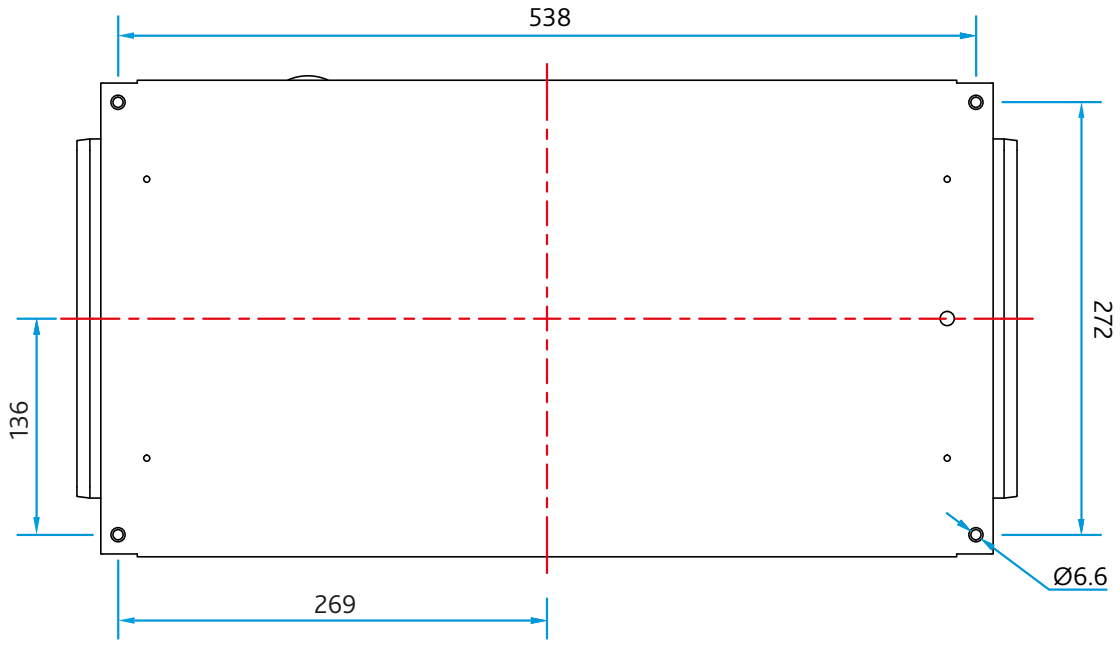

5.0 ELECTRICAL CONNECTION

IMPORTANT

For good EMC practice, any sensor cable or switched live cables should not be placed within 50mm of, or on, the same metal cable tray as other cables.

All electrical connections must be carried out by a qualified electrician.

If the supply cord is damaged, it must be replaced by the manufacturer, its service agent or similarly qualified persons in order to avoid a hazard.

If wall mounting to prevent potential water ingress the cable entry should be on the underside of the unit or replaced with a sealed cable gland, the unit must also be mounted square to prevent ingress around the PCB cover.

The supply cord should be run so the lowest point is below the cable entry grommet to prevent water ingress.

5.1 Examples of Typical Wiring Layouts

The below are examples of potential wiring layouts, alternatives are possible and may be required depending on the installation requirements.

Electrical details:-
Voltage: 230V 1ph 50Hz
Consumption: 1.1 A

Note: The unit must be earthed.

The cable from the mains power supply should be connected to a fixed wiring installation via a fused isolator in accordance with current wiring regulations.

3 PCB Detail

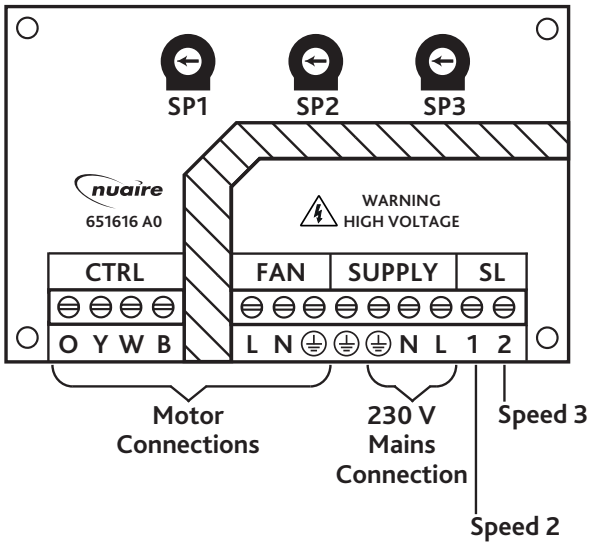

IMPORTANT

All-pole disconnection from the mains as shown in the wiring diagram must be incorporated within the fixed wiring and shall have a minimum contact separation of 3mm in accordance with latest edition of the wiring regulations.

4 Single Speed Wiring

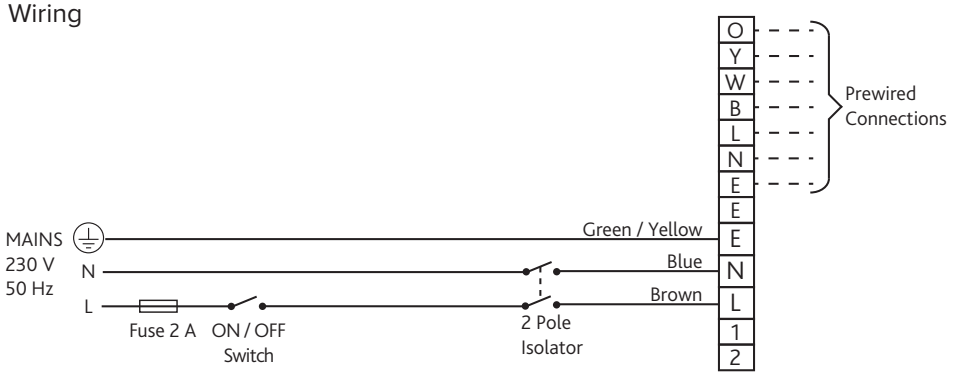

5 Single Speed Wiring with Mains Activated Back-draught Damper

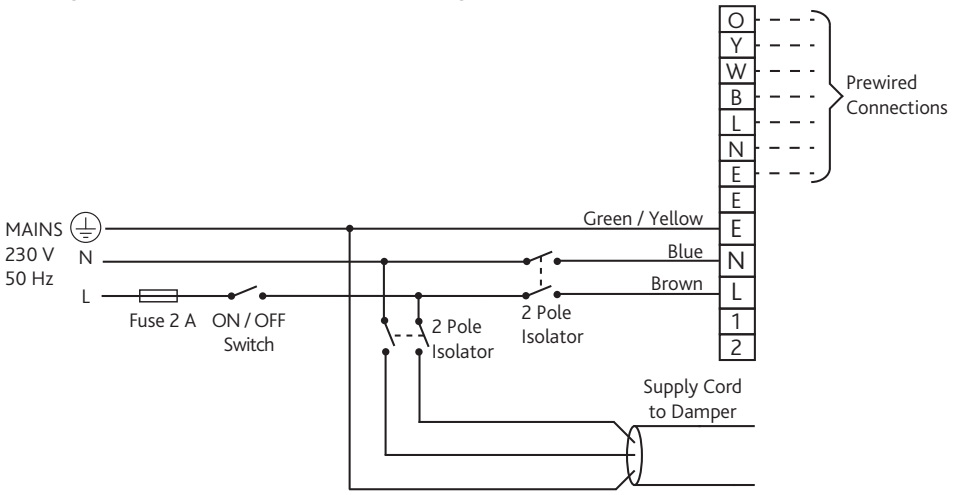

6 Two Speed Wiring

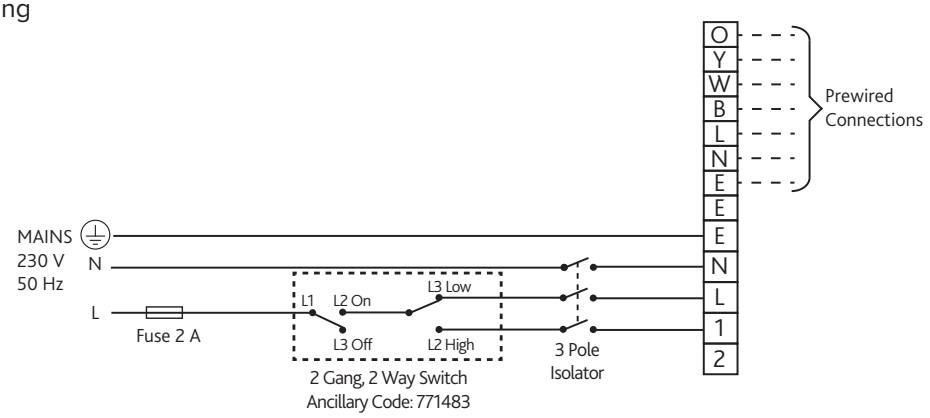

7 Three Speed Continuous Trickle Wiring with Two Boost Speeds

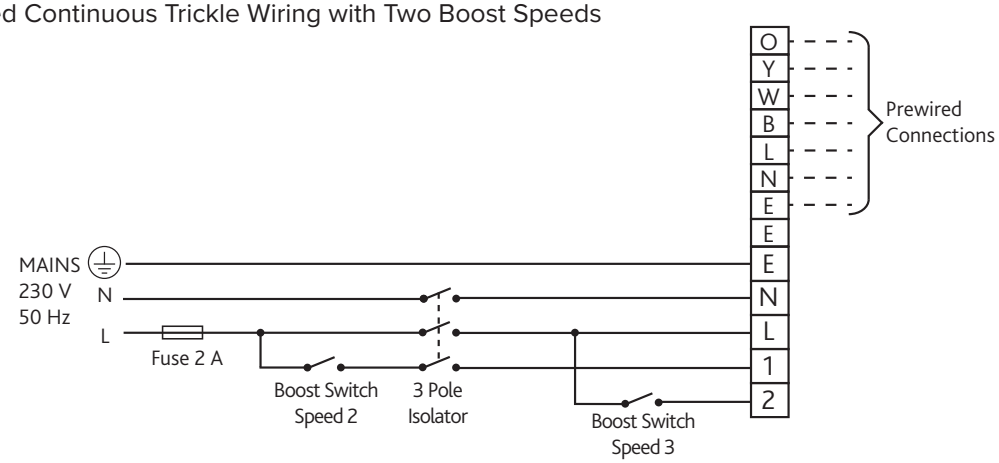

6.0 COMMISSIONING

The unit offers up to three independently variable speeds depending on the required installation and wiring configuration (Section Figure 5.0). To adjust the speed, remove the blanking screw from the appropriate speed control set point and rotate the pot in the desired direction using a small terminal screwdriver (Figure 8).

Ensure the blanking screws are replaced after removing to ensure IPX2 protection.

Commissioning should be carried out in accordance with building regulations.

A calibrated moving vane anemometer and hood will be required to carry out commissioning.

Adjustment valves should be locked in place to prevent further adjustment.

Once commissioned, the home owner / tenant should be informed that the unit should not be adjusted as it will have a detrimental effect on the indoor air quality.

8 Commissioning Set Points

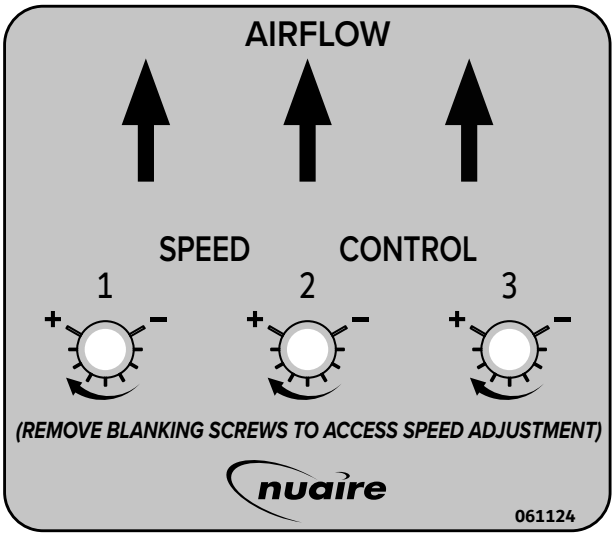

7.0 MAINTENANCE

It is inevitable that even with filtered extract grilles fitted, some dust, fluff etc. will pass through the filter, and which, if allowed, will build up internally on motors and impellers, shortening the life of the unit and in severe cases lead to overheating of the motors. Consequently, it is strongly recommended that all units are inspected and cleaned every year.

8.0 REPLACEMENT OF PARTS

Should any component need replacing, Nuaire keep extensive stocks for quick delivery. Ensure that the unit is electrically isolated, before carrying out any work.

Note: The supply cable must be replaced by an electrically competent person.

When ordering spare parts, please quote the serial number of the unit and the ARC number of the purchase, if possible. (This information will be available on the fan label).

9.0 WARRANTY

The 2 year warranty starts from the day of delivery and includes parts and labour.

This warranty is void if the equipment is modified without authorisation, is incorrectly applied, misused, disassembled, or not installed, commissioned and maintained in accordance with the details contained in this manual and general good practice.

The product warranty applies to the UK mainland and in accordance with Clause 14 of our Conditions of Sale. Customers purchasing from outside of the UK should contact Nuaire International Sales office for further details.

Only genuine Nuaire parts and filters may be used to maintain the unit.

10.0 AFTER SALES

For technical assistance or further product information, including spare parts and replacement components, please contact the After Sales Department.

Telephone 02920 858 400
aftersales@nuaire.co.uk

Technical or commercial considerations may, from time to time, make it necessary to alter the design, performance and dimensions of equipment and the right is reserved to make such changes without prior notice.

NOTES